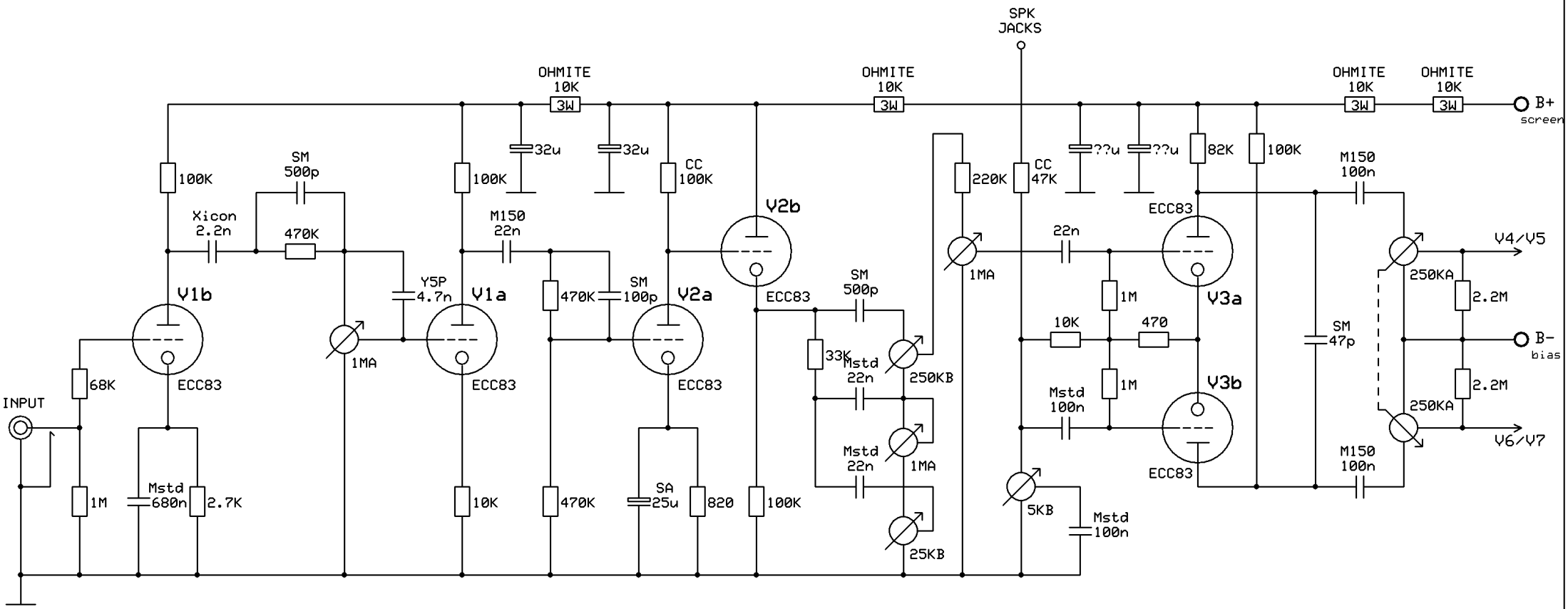

All resistors are Xicon 0.5W CF - except otherwise noted

All pots are PEC's 2W (except PPIMV = Alpha)

CC = Carbon Composition

M150 = Mallory 150/630V

Mstd = NOS Mustard

SA = Sprague Atom

SM = Silver Mica 500V

Y5P = Ceramic cap

ROCKSTAH		
Marshall Mod #5		
novosibir	Rev 1.0 08.04.2011	Page 1/1